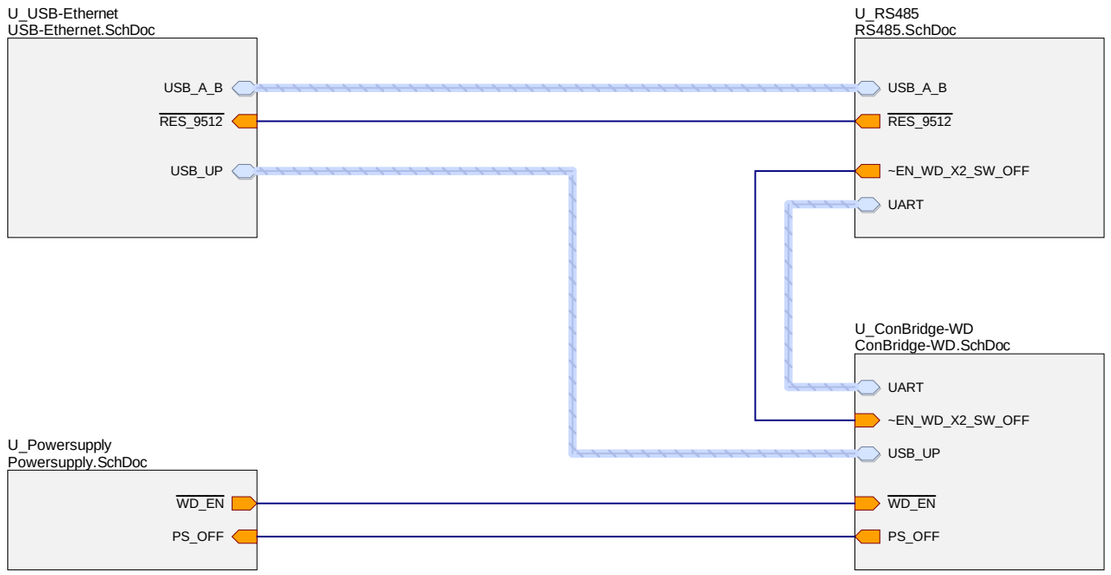

FID1 FID2

DR100 ICT 2.5mm DR101 ICT 2.5mm LP0159R03 LP100 LOGO100 DMC 5X5 DMC100 LABEL100 PCBLabel WOM UL 10x8

KUNBUS industrial communication
KUNBUS GmbH
Heerweg 15c
73770 Denkendorf

Project: Revolution Pi - PiConnectIO	Title: Overview	
Author: VM/VS	approved by: MU	Revision: 04
Size: A3	Number: BG0188R04 LP0159R03	
Date: 07.12.2021	Time: 13:55:46	Sheet 1 of 5
File: Overview.SchDoc		

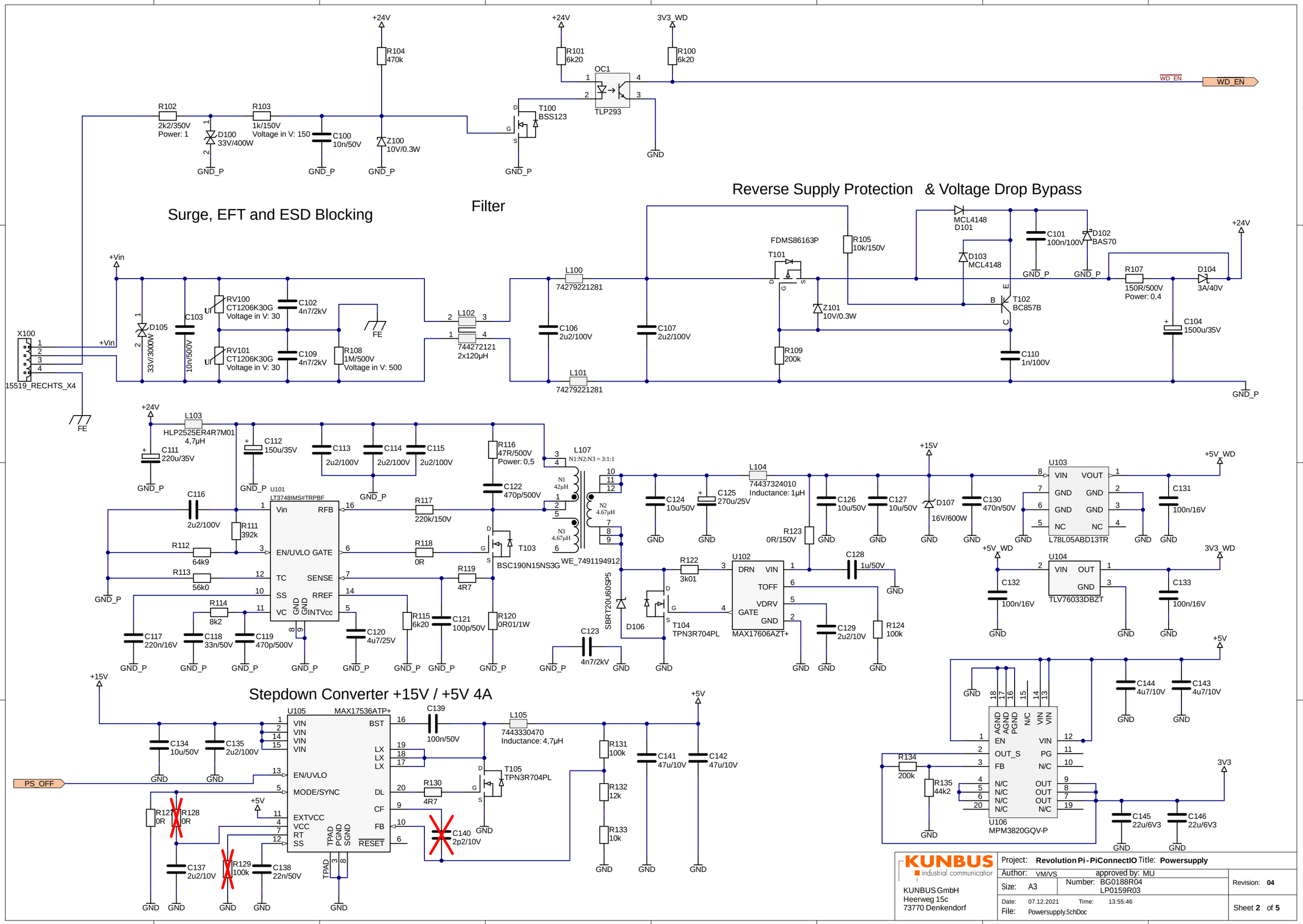

KUNBUS industrial communication

KUNBUS GmbH
Heerweg 15c
73770 Denkendorf

Project:	Revolution Pi - PiConnectIO
Title:	Powersupply
Author:	VM/VS
approved by:	MU
Size:	A3
Number:	BG0188R04 LP0159R03
Revision:	04
Date:	07.12.2021
Time:	13:55:46
File:	Powersupply.SchDoc
Sheet	2 of 5

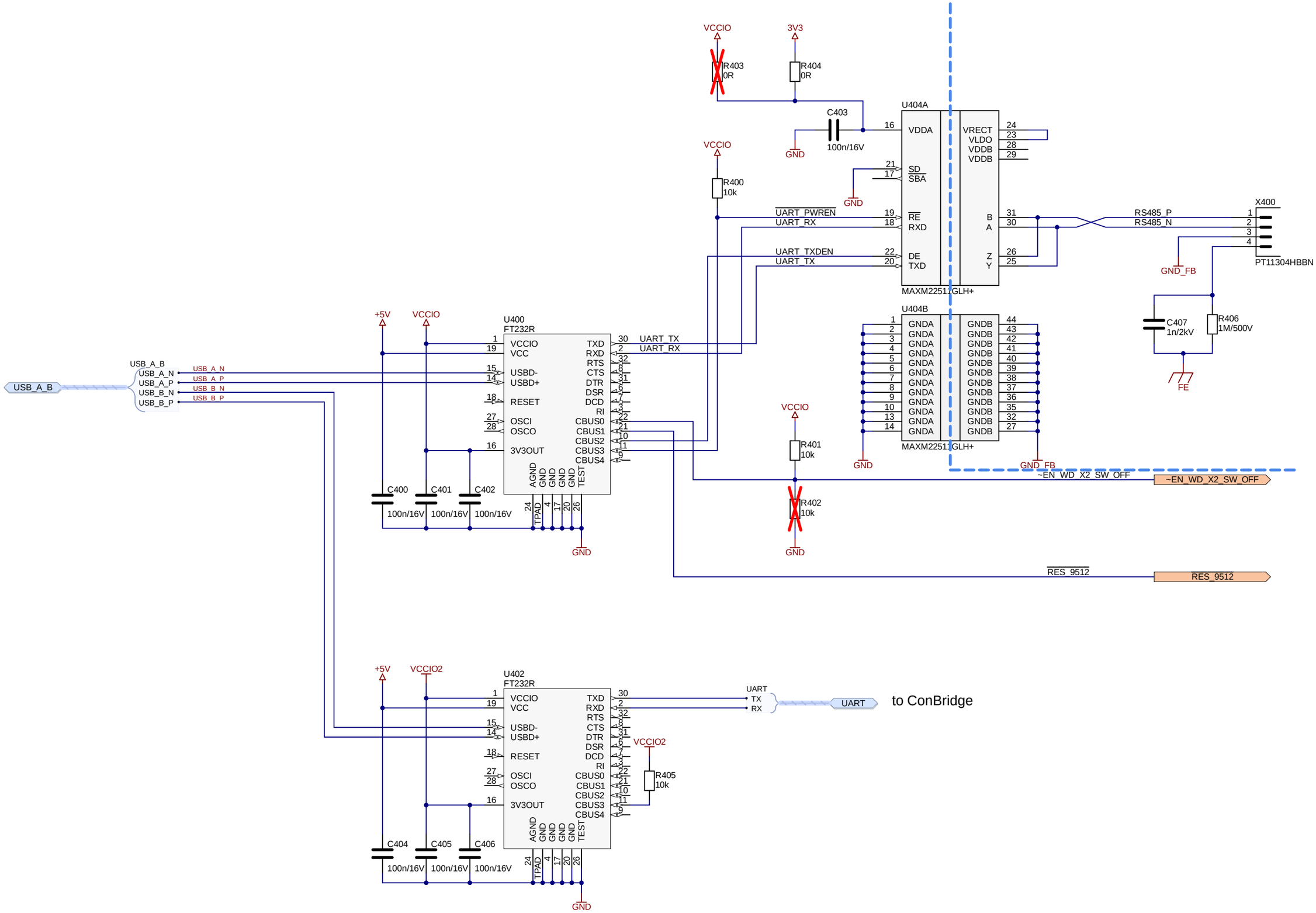

KUNBUS
industrial communication

KUNBUS GmbH
Heerweg 15c
73770 Denkendorf

Project: **Revolution Pi - PiConnectIO**	Title: **RS485**		
Author: VM/VS	approved by: MU		
Size: A3	Number: BG0188R04 LP0159R03		Revision: **04**
Date: 07.12.2021	Time: 13:55:46		
File: RS485.SchDoc			Sheet **3** of **5**

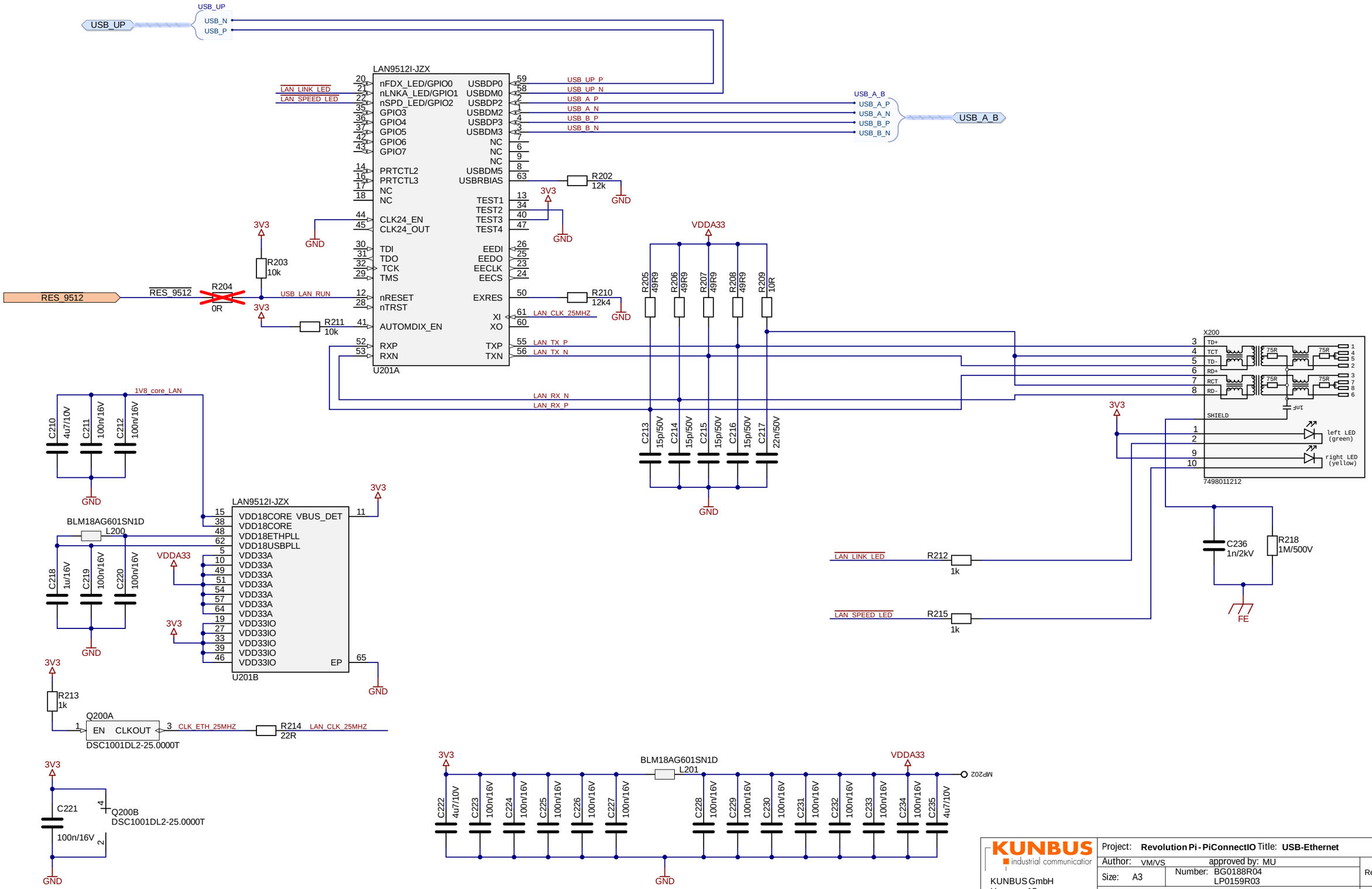

KUNBUS industrial communication

KUNBUS GmbH
Heerweg 15c
73770 Denkendorf

Project: **Revolution Pi - PiConnectIO**	Title: **USB-Ethernet**		
Author: VM/VS	approved by: MU		Revision: **04**
Size: A3	Number: BG0188R04 LP0159R03		
Date: 07.12.2021	Time: 13:55:46		Sheet **4** of **5**
File: USB-Ethernet.SchDoc			
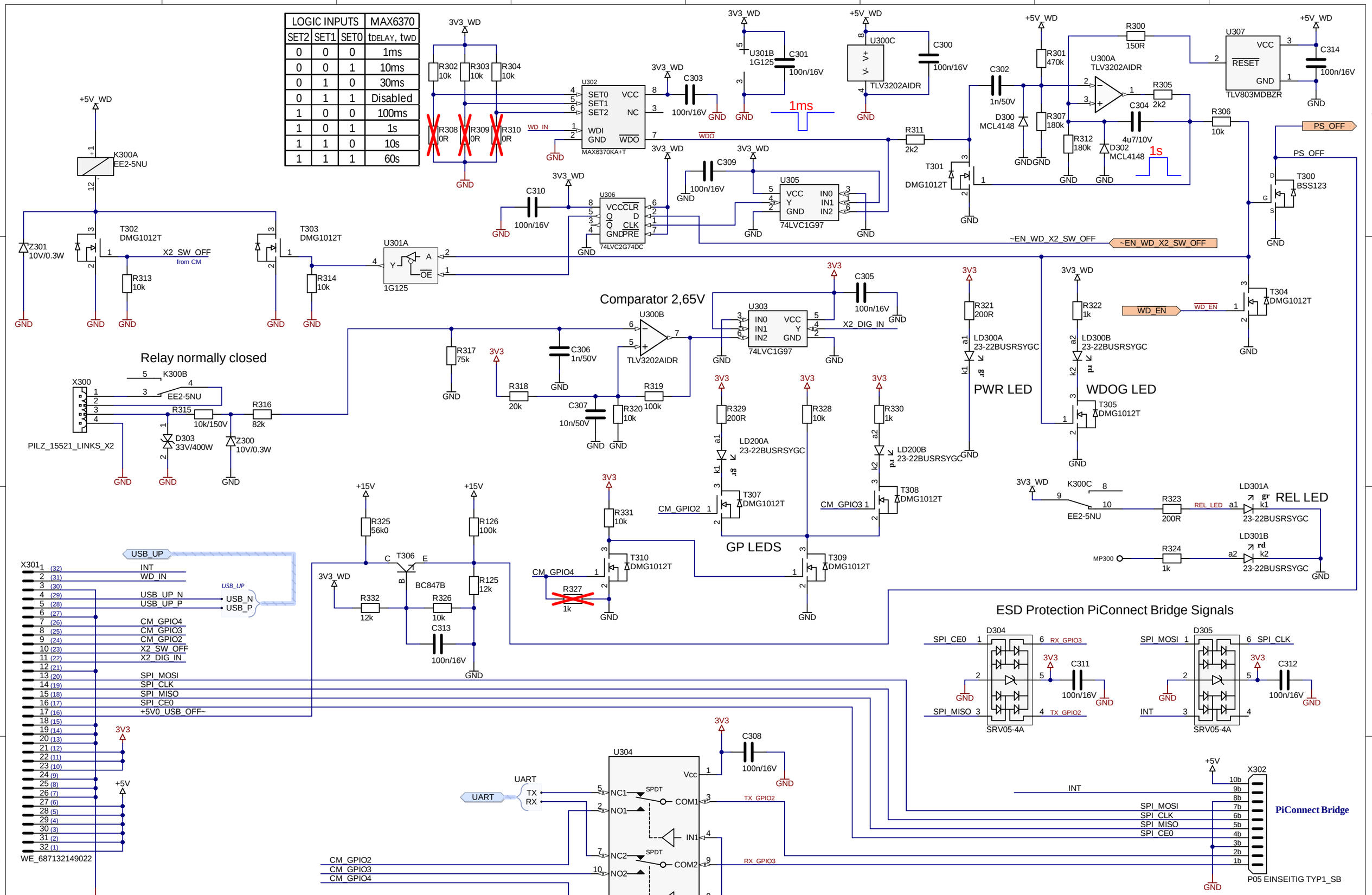
LOGIC INPUTS			MAX6370
SET2	SET1	SET0	tDELAY, twD
0	0	0	1ms
0	0	1	10ms
0	1	0	30ms
0	1	1	Disabled
1	0	0	100ms
1	0	1	1s
1	1	0	10s
1	1	1	60s