Connect4 Power Board

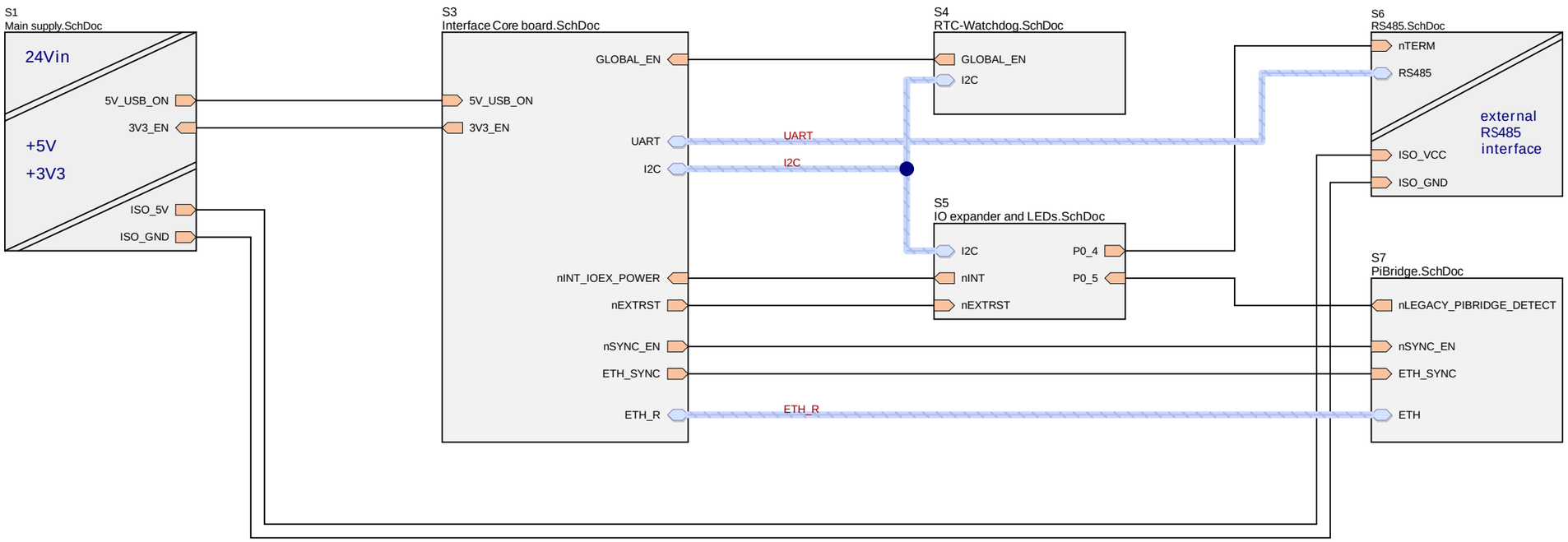

FID100 FID101

DR100 ICT 2.5mm DR101 ICT 2.5mm LP0205R03 KUNBUS industrial communication DMC 5X5 PCBLabel WOM UL 10x8

KUNBUS industrial communication
KUNBUS GmbH
Heerweg 15c
73770 Denkendorf

Project: Connect4 Power Board	Title: Overview		
Author: ME	approved by: *		Revision: 03
Size: A3	Number: BG0239R03 LP0205R03		
Date: 12.01.2023	Time: 18:12:09		Sheet 1 of 7
File: Overview.SchDoc			

Power Supply

Reverse Supply Protection & Voltage Drop Bypass

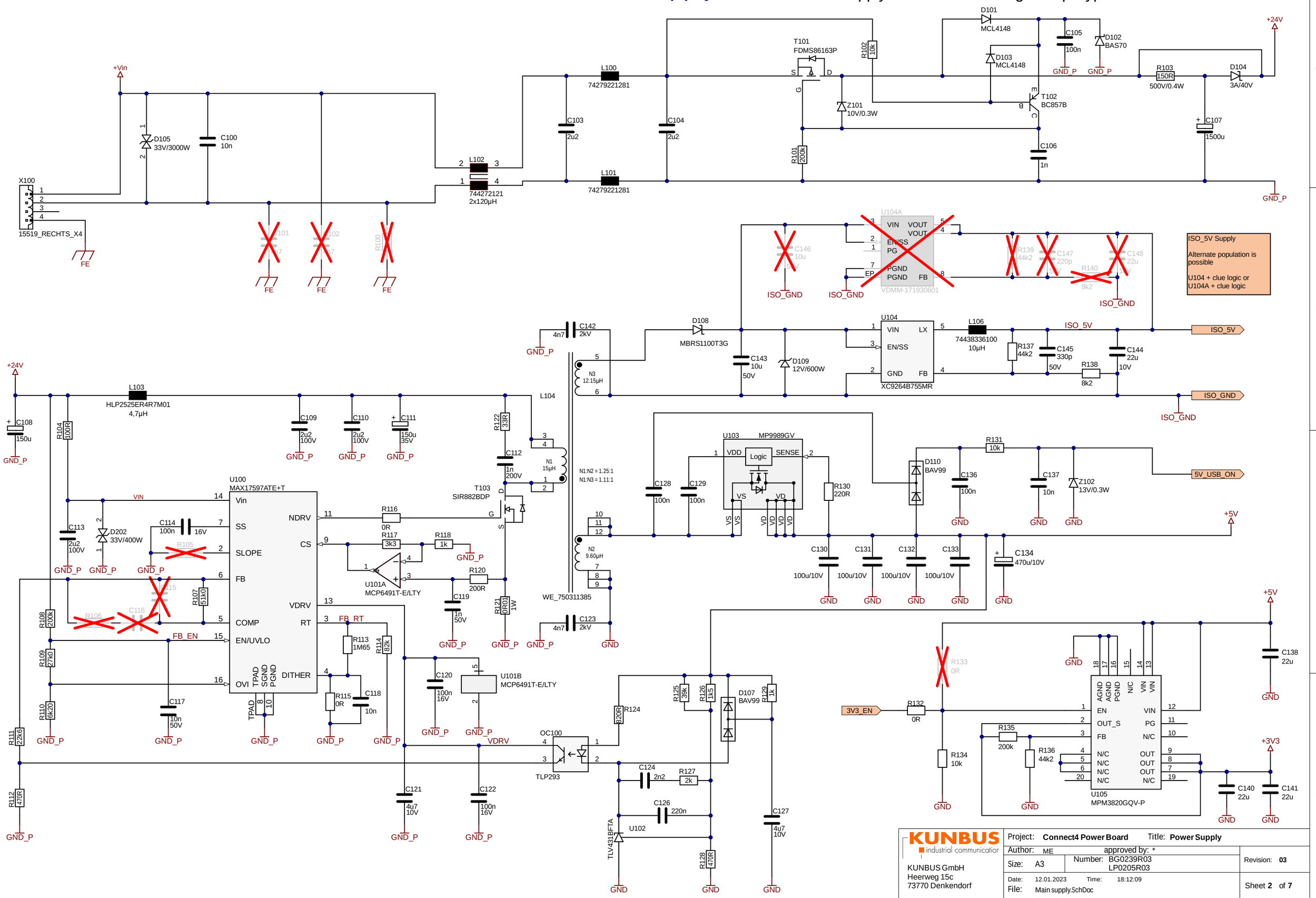

KUNBUS industrial communication

KUNBUS GmbH
Heerweg 15c
73770 Denkendorf

Project: **Connect4 Power Board**	Title: **Power Supply**		
Author: ME	approved by: *		
Size: A3	Number: BG0239R03 LP0205R03		Revision: **03**
Date: 12.01.2023	Time: 18:12:09		
File: Main supply.SchDoc			Sheet **2** of **7**

RS485

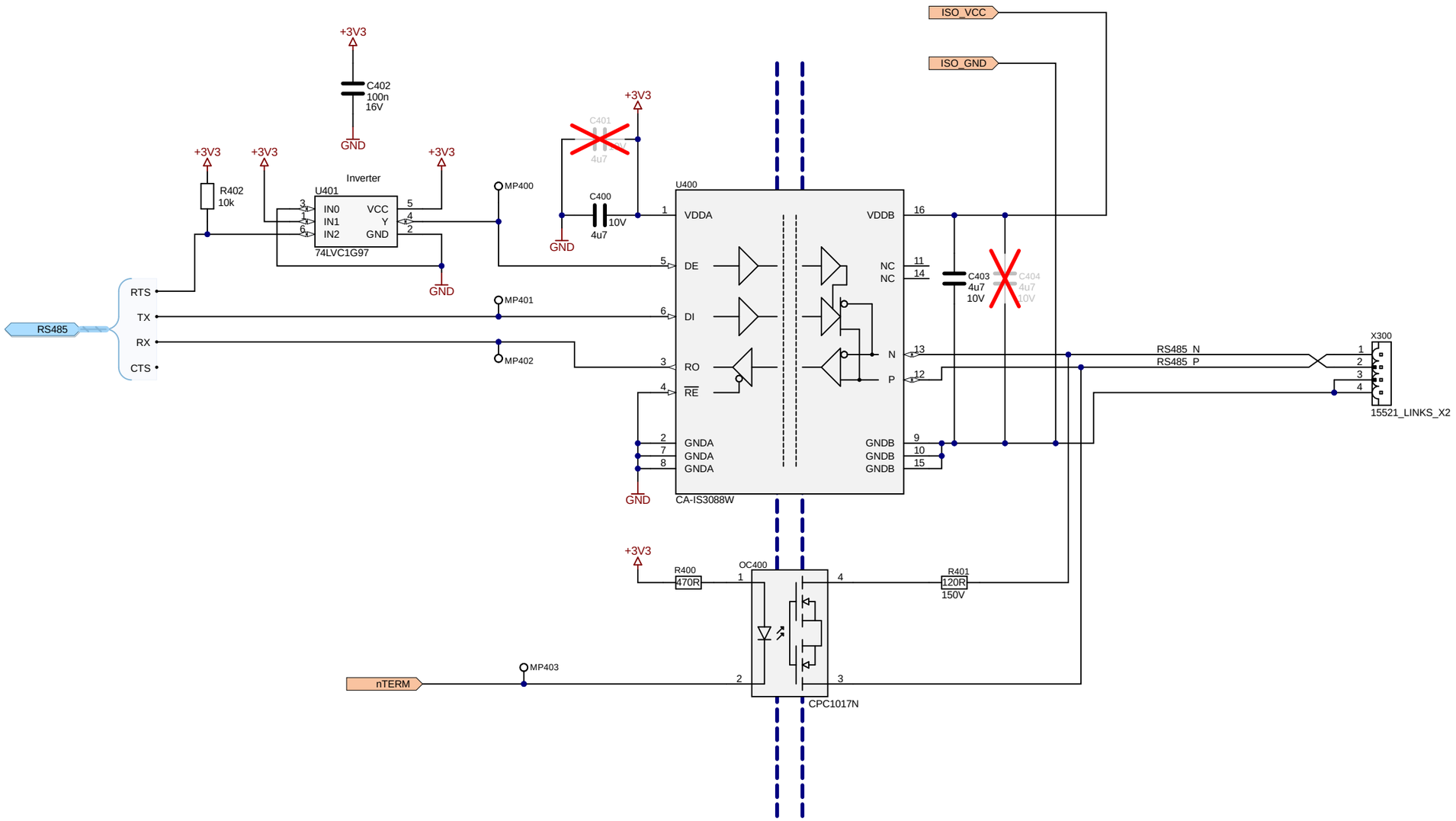

KUNBUS
industrial communication

KUNBUS GmbH
Heerweg 15c
73770 Denkendorf

Project: **Connect4 Power Board**	Title: **RS485**		
Author: ME	approved by: *		Revision: **03**
Size: A3	Number: BG0239R03 LP0205R03		
Date: 12.01.2023	Time: 18:12:10		Sheet **3** of **7**
File: RS485.SchDoc			

IO expander and LEDs

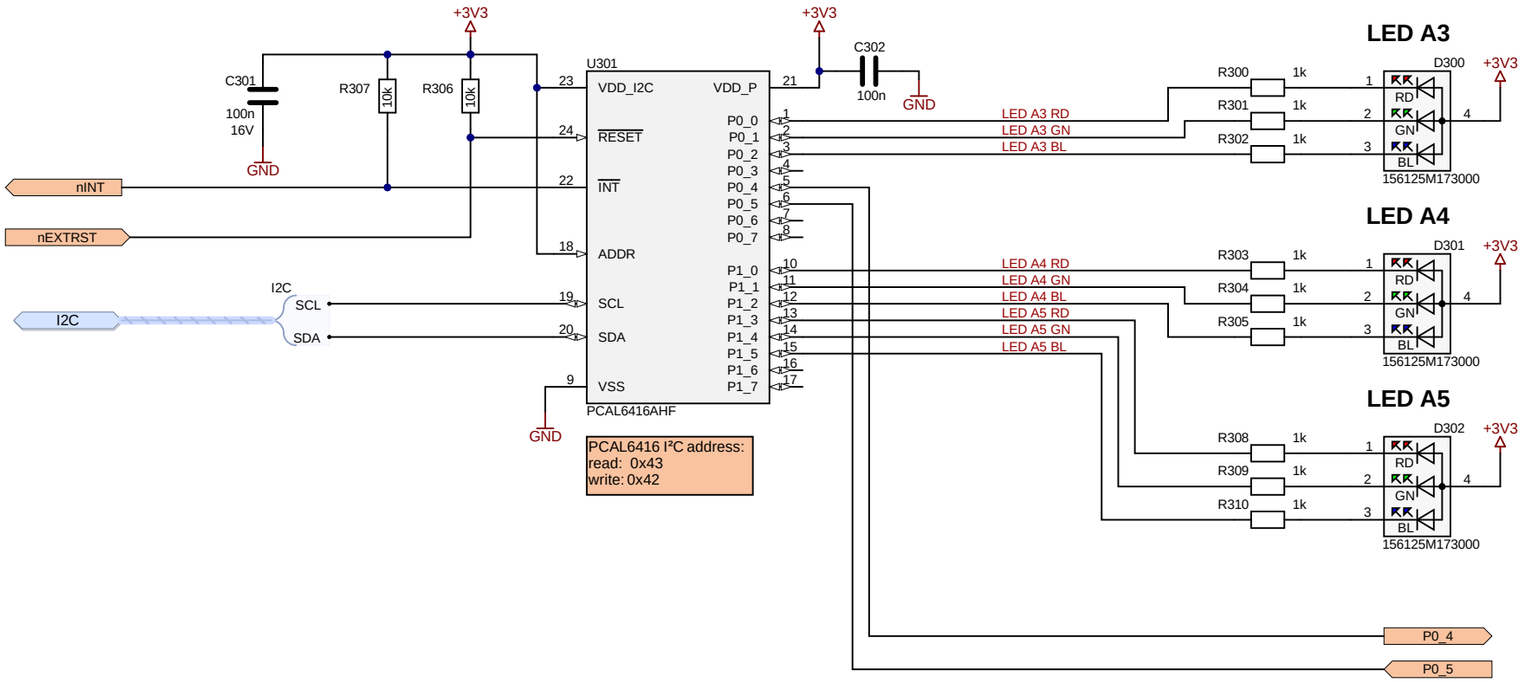

Wireless LAN

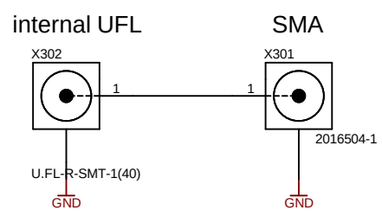

KUNBUS
industrial communication

KUNBUS GmbH
Heerweg 15c
73770 Denkendorf

Project: **Connect4 Power Board**	Title: **IO expander, LEDs**		
Author: ME	approved by: *		Revision: **03**
Size: A3	Number: BG0239R03 LP0205R03		
Date: 12.01.2023	Time: 18:12:10		Sheet **4** of **7**
File: IO expander and LEDs.SchDoc			

Interface to Connect4 Core Board

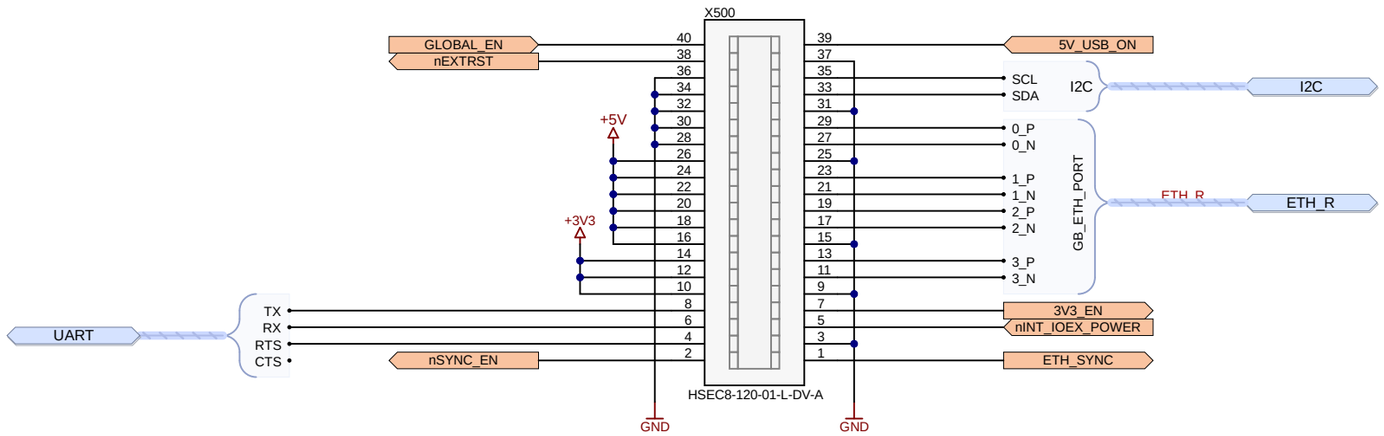

KUNBUS
industrial communication

KUNBUS GmbH
Heerweg 15c
73770 Denkendorf

Project: **Connect4 Power Board**		Title: **Interface to Connect4 Core Board**	
Author: ME		approved by: *	Revision: **03**
Size: A3	Number: BG0239R03 LP0205R03		
Date: 12.01.2023	Time: 18:12:10		Sheet **5** of **7**
File: Interface Core board.SchDoc			

PiBridge

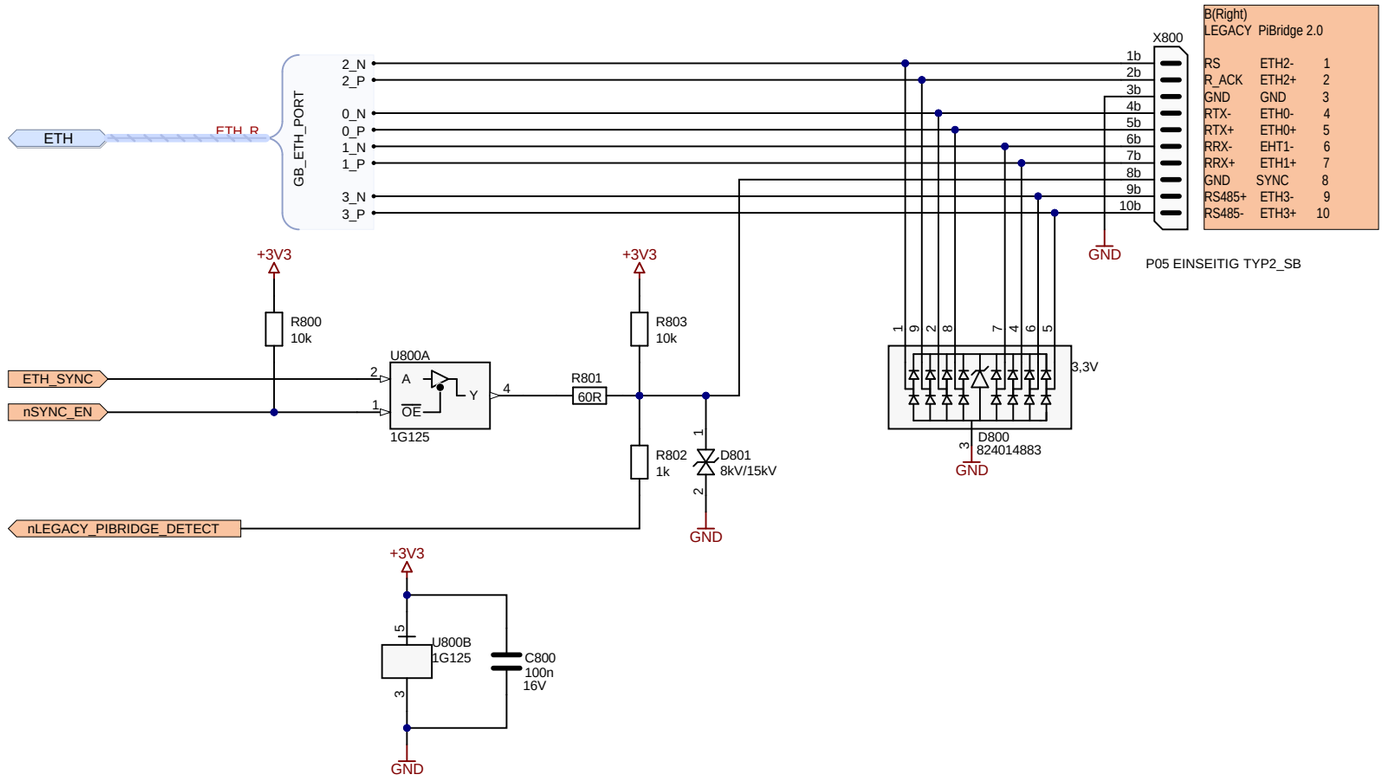

KUNBUS industrial communication

KUNBUS GmbH
Heerweg 15c
73770 Denkendorf

Project: **Connect4 Power Board**	Title: **PiBridge**		
Author: ME	approved by: *		Revision: **03**
Size: A3	Number: BG0239R03 LP0205R03		
Date: 12.01.2023	Time: 18:12:10		Sheet **6** of **7**
File: PiBridge.SchDoc			

RTC

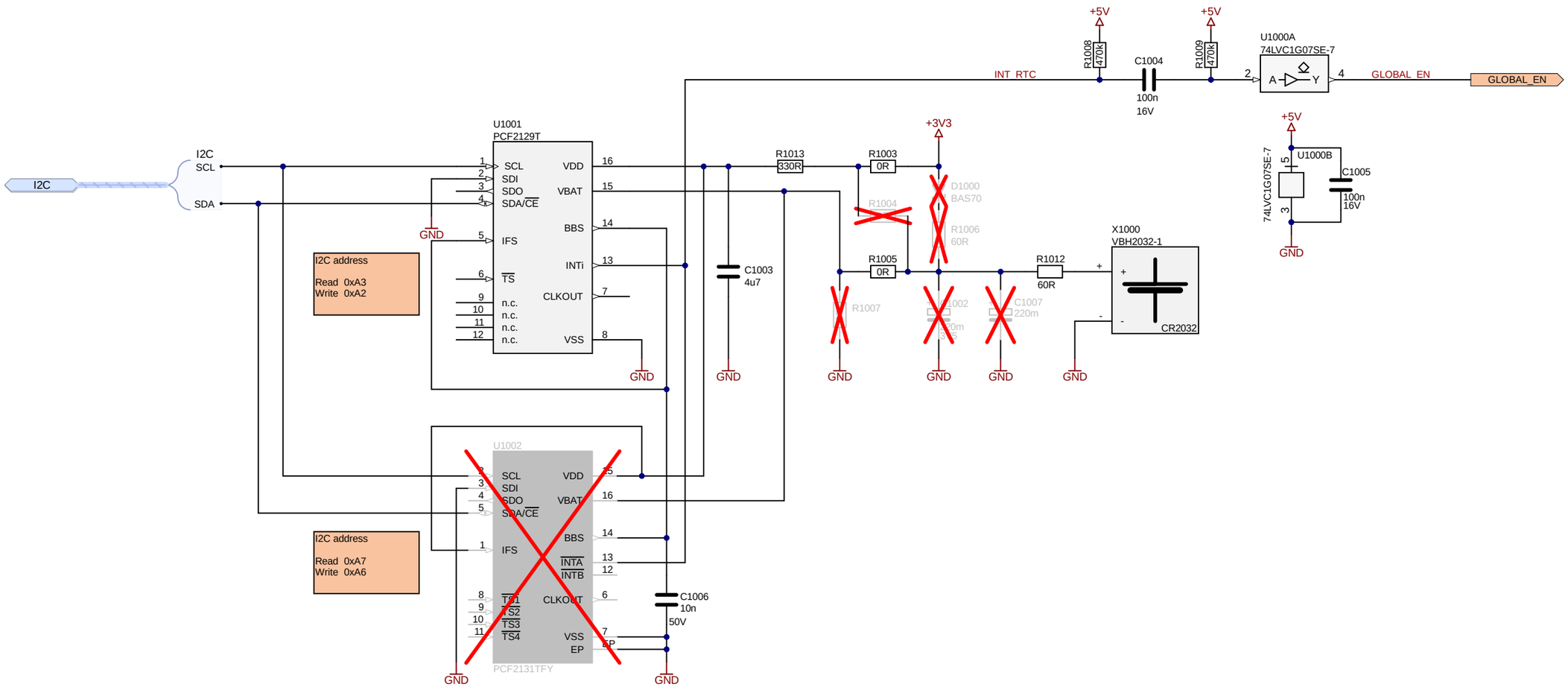

KUNBUS
industrial communication

KUNBUS GmbH
Heerweg 15c
73770 Denkendorf

Project: **Connect4 Power Board**		Title: **RTC**	
Author: ME	approved by: *		Revision: **03**
Size: A3	Number: LP0205R03		
Date: 12.01.2023	Time: 18:12:10		Sheet **7** of **7**
File: RTC-Watchdog.SchDoc			